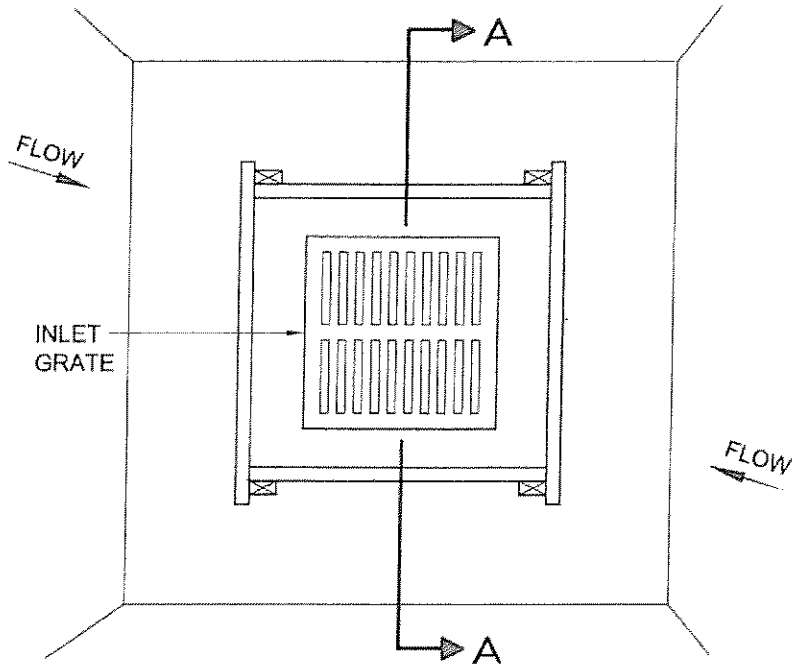

PLAN

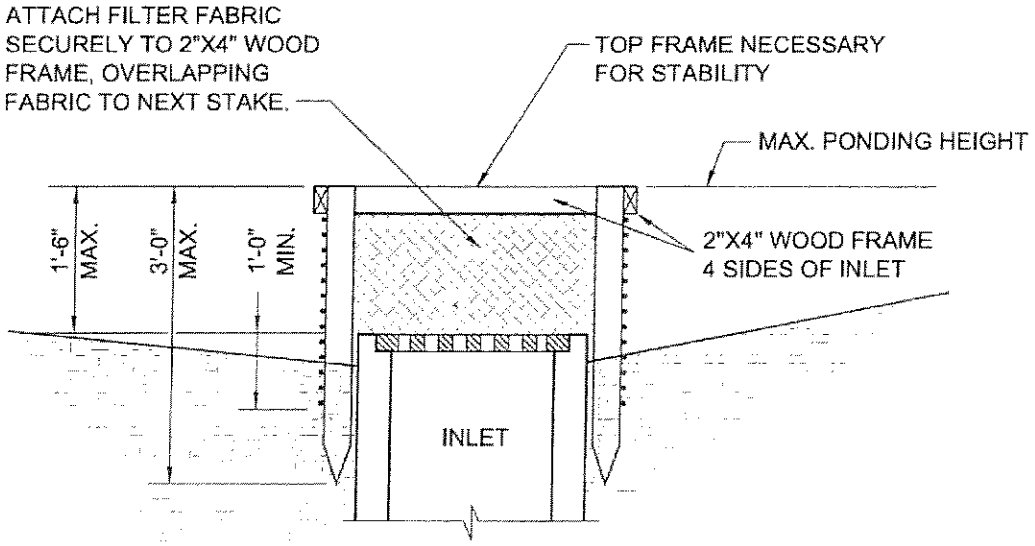

SECTION A-A

SILTATION CONTROL AT INLET - TYPE "B"

NOT TO SCALE

CITY OF LAKELAND
ENGINEERING DIVISION

SILTATION CONTROL AT INLET - TYPE "B"

REV.	DESCRIPTION	DATE
1	ORIGINAL ISSUE	4/2008